APPROVED FOR CONSTRUCTION : JUNE 20, 1980

Charles D. Gardner
CHARLES D. GARDNER, MANAGER/SUPERINTENDENT
SEWERAGE COMMISSION OROVILLE REGION

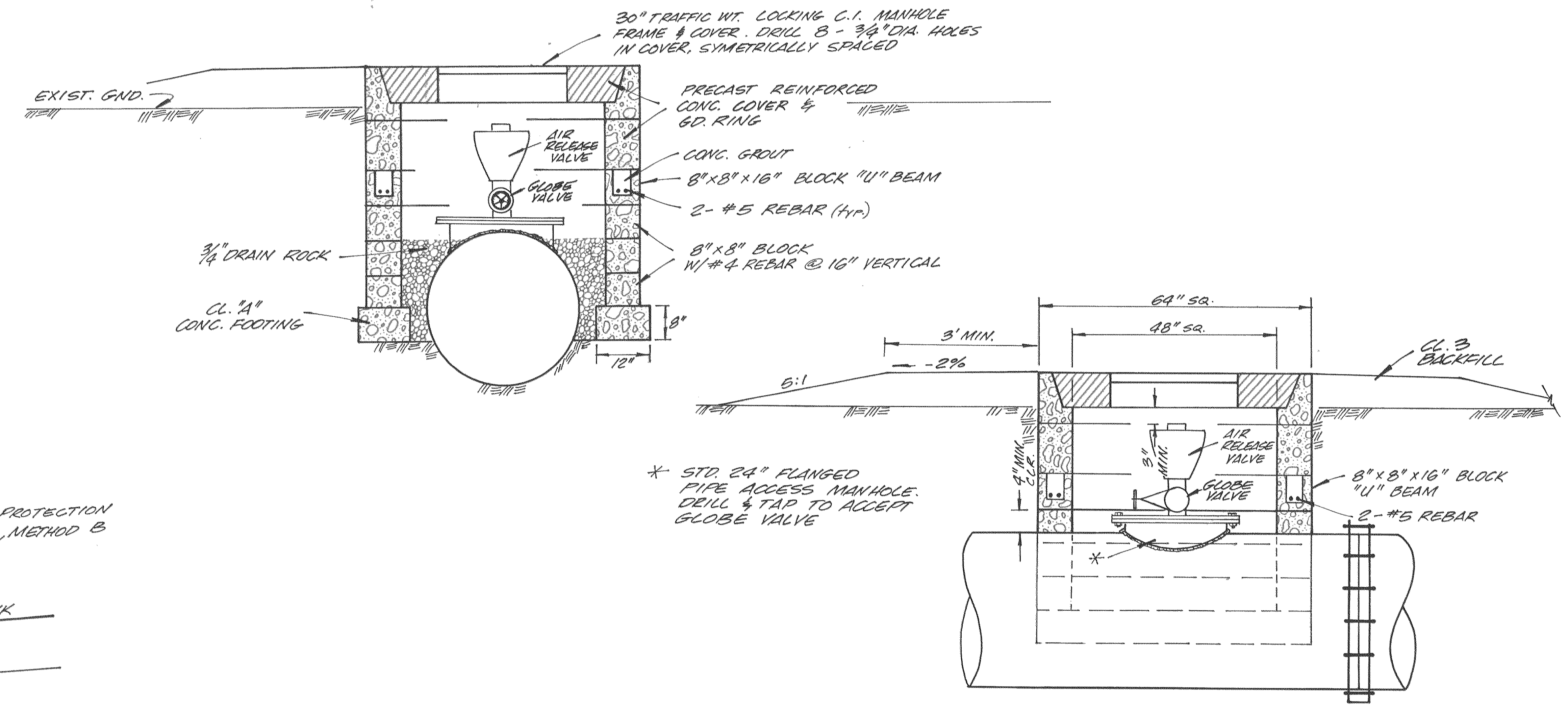

2/C6 AIR RELEASE VALVE ASSEMBLY
NOT TO SCALE

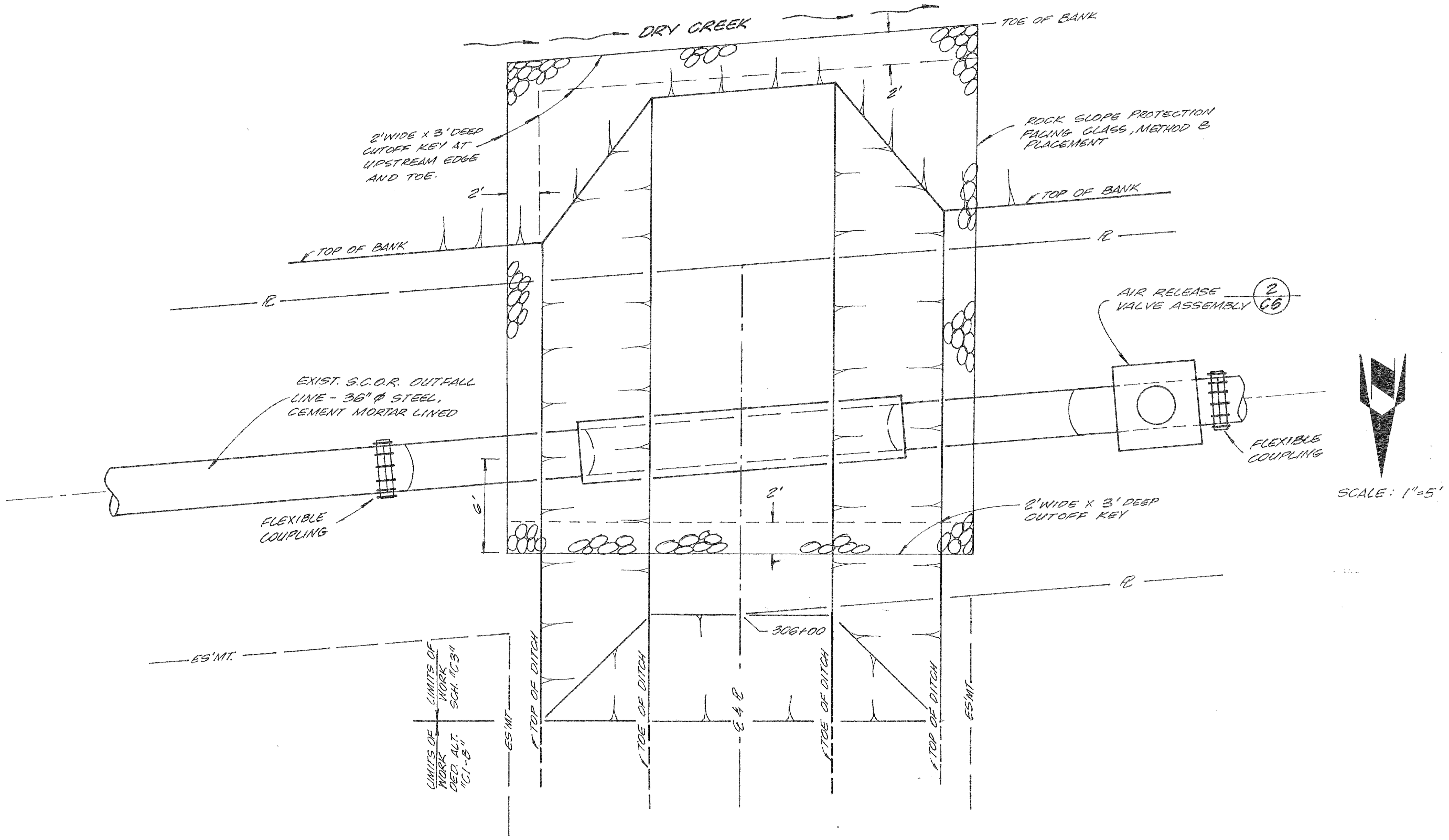

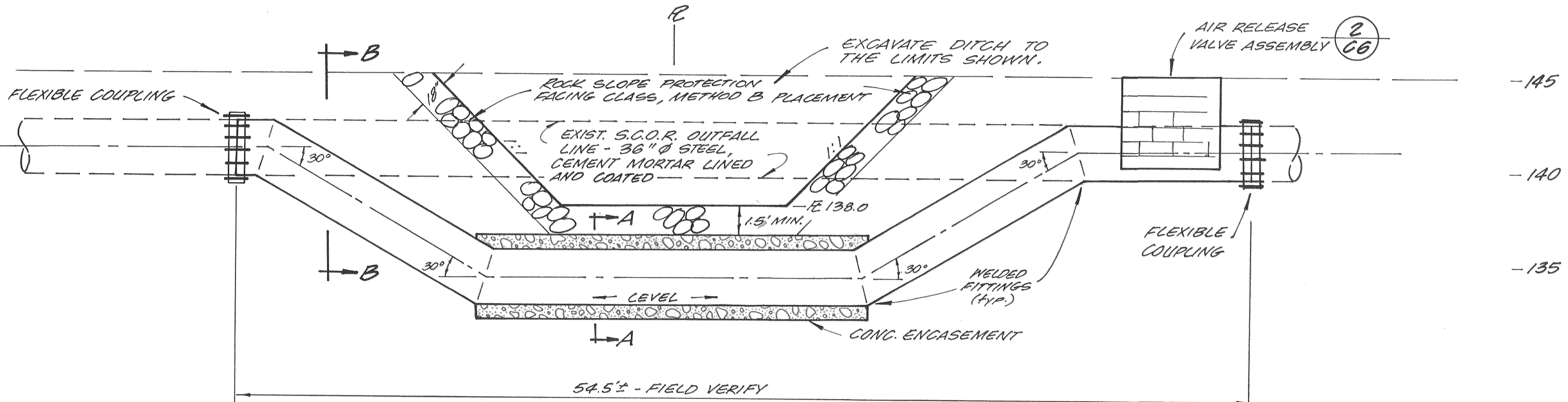

NOTES:

1. EXPOSE & FIELD VERIFY LOCATION & DIMENSIONS OF EXIST. 36" Ø PIPE. SUBMIT SHOP DRAWINGS.
2. FABRICATE REPLACEMENT PIPE SECTION
3. REMOVE EXIST. PIPE SECTION & PLACE FABRICATED PIPE SECTION
4. ALL WORK MUST BE COORDINATED AND PERFORMED IN ACCORDANCE WITH THE DIRECTIVES OF S.C.O.R.
5. SEE SPECIFICATIONS FOR CONSTRUCTION & MATERIALS REQUIREMENTS

SCHEDULE "C3"

1/C6 S.C.O.R. OUTFALL LINE RELOCATION

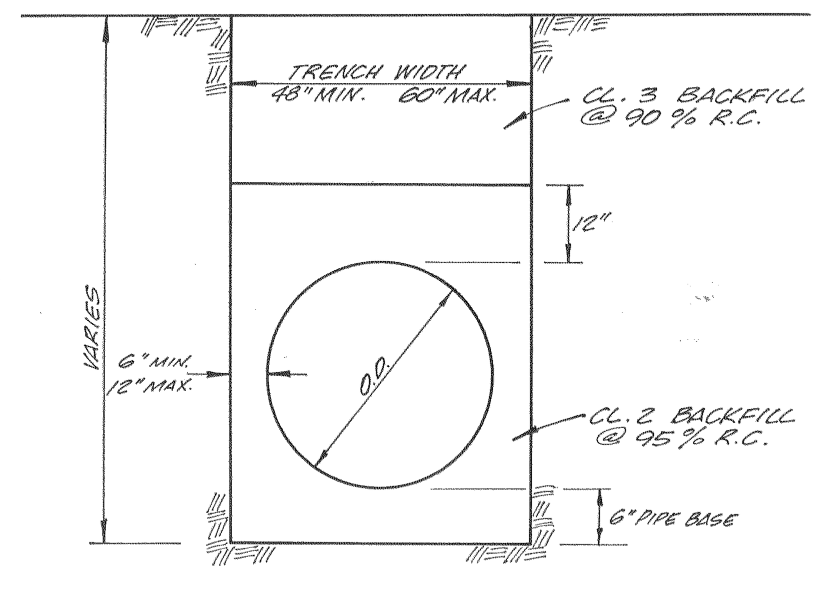

SECTION B-B
NOT TO SCALE

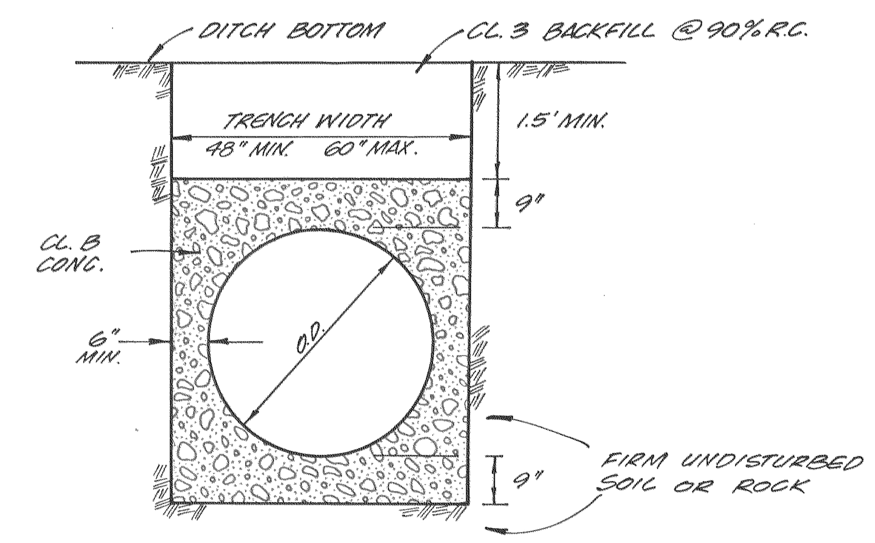

SECTION A-A
CONCRETE ENCASEMENT
NOT TO SCALE

AS BUILT 7/6/81

COOK ASSOCIATES
ENGINEERING CONSULTANTS
2060 PARK AVENUE, OROVILLE, CALIFORNIA 95965

CITY OF OROVILLE
Industrial Unit No. 2
E.D.A. PROJECT NO. 07-01-02169
S.C.O.R. OUTFALL LINE RELOCATION

REGISTERED PROFESSIONAL ENGINEER
Daniel James Cook
13062
Civil Engineer
STATE OF CALIFORNIA

REVISION	DATE
S.JACKSON II	1/80
DRAWN	DATE
D.J.C.	1/80
APPROVED	DATE
A-361	
FILE NO.	

SHEET NO. C6 OF 27 SHTS
JOB NO. 79457

SS 292